SPEC

catalog number:

notes:

fixture type:

project:

## DOWNLIGHT SERIES - 6" RECESSED LED DOWNLIGHT

**The LEDalux** LED downlights are great energy efficient solutions for recessed lighting applications. The new construction and remodel fixtures have been engineered to make installation in grid ceilings and dry wall ceilings a snap. Each recessed fixture is supplied with a performance-leading LED module and white trim ring that installs flush to the ceiling. A high performance LED array emits industry leading lumen output, high CRI (85), and still delivers extended lifetime in excess of a 50,000 L70 measurement.

LXRF614ICAT30W

## FEATURES:

- Fully dimmable down to 10 percent
- High lumen transmission and diffusing for even illumination
- CRI: >85
- Suitable for dry and wet locations
- Airtight rated – meets airtight requirements for 2.0 CFM or less air leakage
- Rated for direct insulation contact
- Supplied with internal thermal protection
- Universal voltage 120-277 volt
- Power factor: >.9
- Beam angle: 90 degree

LXRFR614ICAT30W

## CONSTRUCTION:

- New construction housing includes 13” hanger bars, supplied with pre-installed nails: just hammer and go
- Impact-resistant plastic lens
- Housing and trim are gasketed to maximize building energy efficiency
- Hanger bars feature notches for easy installation to grid ceilings, which can be secured using wire or screws
- Remodel housing includes three push out mounting clips for easy installation
- Recessed housing is aluminum; new construction frame is steel

## ORDERING INFORMATION

| Model Number | Lumens | CRI | Luminair Life (Hrs.) | Fixture Dimensions W”x H” x L” | CCT |
|---|---|---|---|---|---|
| LXRF614ICAT30W | 900 | 85 | 50,000 | 10.37 x 7.5 x 7.63 | 3000 |
| LXRFR614ICAT30W | 900 | 85 | 50,000 | 6.12 x 7.5 x 12.75 | 3000 |

LED Eco-Smart

catalog number:

notes:

fixture type:

project:

## SPECIFICATIONS:

| Item | Specification | LXRF614ICAT30W | LXRFR614ICAT30W |
|---|---|---|---|
| General Performance | Spacing Criteria | Available upon request | Available upon request |
| | Color Temperature | 3000K | 3000K |
| | Lumens Delivered | 900 | 900 |
| | Efficacy | 64 lumen/watt | 64 lumen/watt |
| | Color Consistency | Proprietary binning for uniform color | Proprietary binning for uniform color |
| | Lumen Maintenance (L70) | 50,000 hours | 50,000 hours |
| Physical | Dimensions | 10.37" x 7.5" x 7.63" | 6.12" x 7.5" x 12.75" |
| | Weight | 1 lb. | 1 lb. |
| | Housing | Aluminum | Aluminum |
| | Lens | Polycarbonate | Polycarbonate |
| | Mounting | Hanger bars for joists or grid ceilings | Mounting clips |
| | Operating Temperature | -4˚F to 113˚F | -4˚F to 113˚F |
| Certification | Certification | ETL,LM-79, LM-80 | ETL,LM-79, LM-80 |
| | Material Usage | RoHS compliant; no mercury | RoHS compliant; no mercury |
| | Environment | Indoor/outdoor | Indoor/outdoor |
| | | | 5 year |

## Dimensions

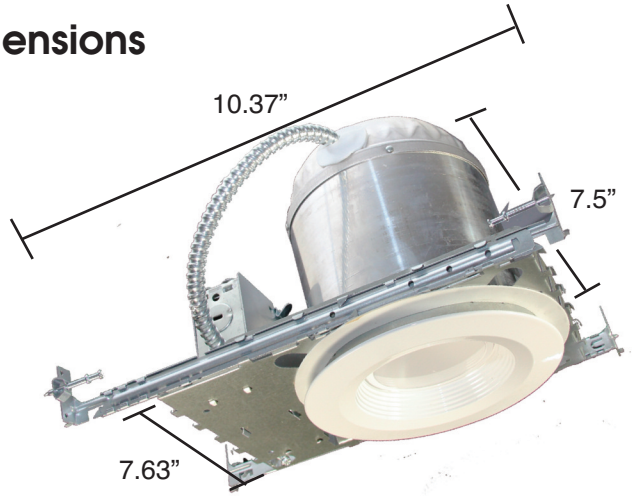


LXRF614ICAT30W

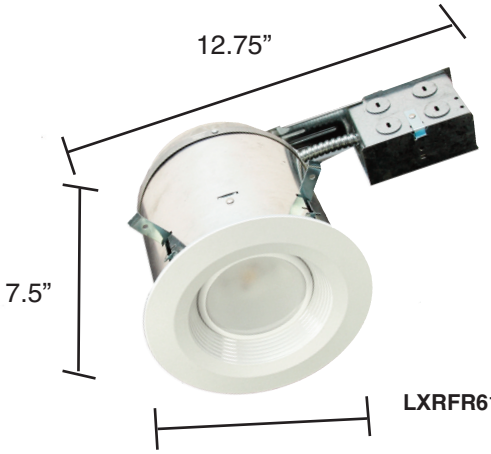


Width of inner can

LXRFR614ICAT30W