catalog number:

notes:

fixture type:

project:

DOWNLIGHT SERIES - 9" RECESSED LED DOWNLIGHT RETROFIT

The LEDalux commercial-grade LED Recessed Downlight Retrofit is supplied with a quick connect-case and conduit to make an easy connection to an existing recessed fixture frame junction box.

FEATURES:

- Universal voltage (120-277)
- Mounts into existing recessed frame
- Supplied with optional retaining clips if existing frame does not have adequate friction springs to secure reflector
- cETL listed for damp location use
- CRI: > 85
- PF: >.9
- A wide variety of CCTs available:
  3000K and 4000K come standard 2700K and 5000K (contact LEDalux for quotations)
- Five year limited warranty
- Non-dimming only

CONSTRUCTION:

- Supplied with a heavy gauge anodized aluminum reflector in a haze finish
- External driver for easy retrofit and maintenance
- Power supply features integral thermal protection

OVERALL DIMENSIONS

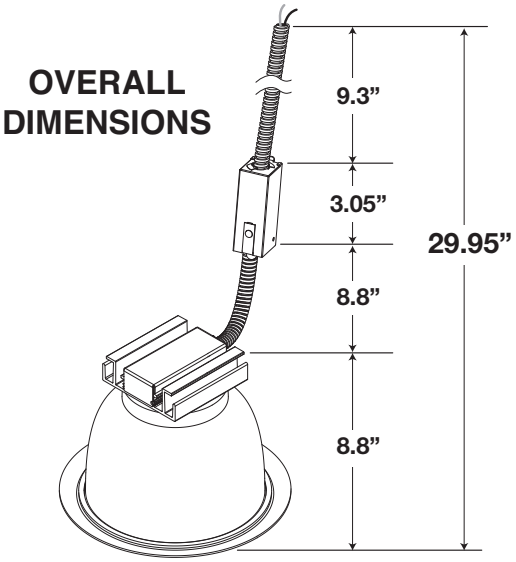

ORDERING INFORMATION

Model Number	Watts	Fluorescent Equivalent	Lumens	Lamp Life (Hrs.)	CCT
LXRR92630W	26	2 X 18W PL	1500	50,000	3000
LXRR92640W	26	2 X 18W PL	1645	50,000	4000
LXRR93430W	34	2 X 26W PL	1950	50,000	3000
LXRR93440W	34	2 X 26W PL	2145	50,000	4000

catalog number:

notes:

fixture type:

project:

SPECIFICATIONS:

REFLECTOR	STANDARD TRIM RING
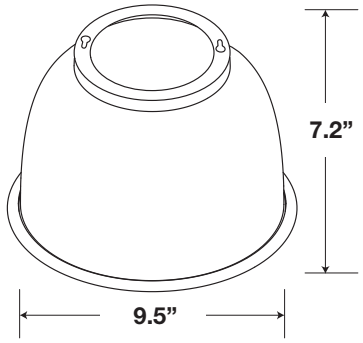	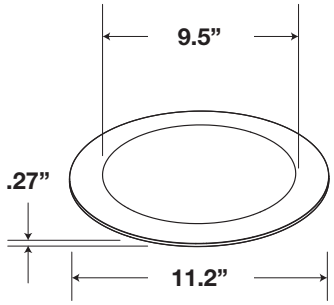

PRODUCT FEATURES

EXTERNAL DRIVER	RETAINING CLIPS
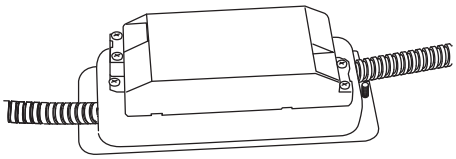 34W	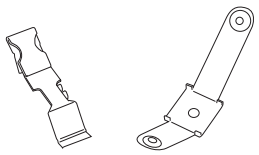 Retaining clips are supplied for situations where the existing recessed frame does not have pre-installed clips to secure the reflector.