LEDALUX®

WPA - Adjustable Wall Pack

eZ SPEC

L70 25°C 56,000 Hours

CATALOG NUMBER:

NOTES:

FIXTURE TYPE:

PROJECT:

FEATURES

- Available in 4000k (neutral white) and 5000k (cool white) color temperatures.*
- Adjustable up to 90°.
- Long-life LEDs provide at least 70% of initial lumen output (L70) for ≥56,000 hours of operation, and at least 90% of initial lumen output (L90) for ≥ 17,000hours of operation.*
- LED chromaticity based on ≤ 5-step ANSI quadrangles.
- LED color maintenance ≤ 0.002 chromaticity shift ((Δu'v') over the initial 6,000 of operation.
- Provides a range of 2,680 to 10,824 nominal lumens and 113 to 118 nominal lumens per watt (lm/W).
- 0-10vdc dimming drivers, which provide 10% continuous dimming are standard.
- Universal 120-277 AC voltage (50-60Hz) is standard.
- Power factor > 0.90.
- Total harmonic distortion < 20%.
- Color rendering index (Ra) > 80.Red color rendering > 16.
- Cast aluminum housing with dark bronze, powder coat finish.
- Polycarbonate lens.
- Two ½" NPT threaded openings.
- Easy installation in new construction or retrofit applications.

*Contact factory for other color temperatures and lumen packages.
**L70 & L90hours are IES TM-21-11 calculated hours.

DIMENSIONS

3L & 4L models

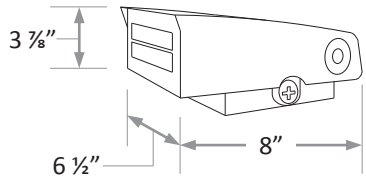

7L & 8L models

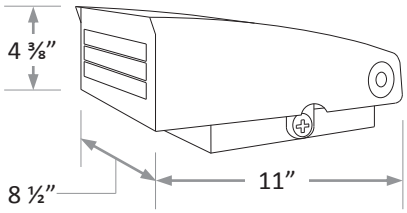

11L model

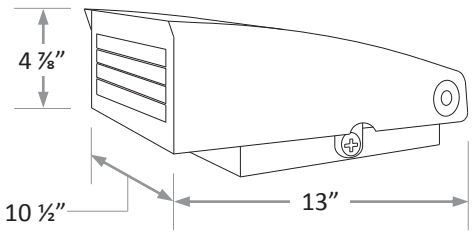

WARRANTY & LISTINGS

- cULus listed for wet locations in ambient temperatures from -40°C to 40°C (-40°F to 104°F).
- IP65 rated for ingress protection.
- DLC 5.1 approved.
- Complies with FCC Part 15, class A (3L & 4L).
- Complies with FCC Part 15, class B (7L, 8L, & 11L).
- Complies with IEC61000-4-5, surge immunity protection (2kV).
- Complies with RoHS (Restriction on Hazardous Substances) requirements.
- 5-year warranty of all electronics and housing.

ORDERING INFORMATION

Example: WPA-3L-4K

Model	Nominal Lumen Output	Color Temperature
WPA	3L = 3,000 lumens 4L = 4,000 lumens 7L = 7,000 lumens 8L = 8,000 lumens 11L = 11,000 lumens	4K = 4000k 5K = 5000k

LED Eco-Smart

LEDALUX®

WPA - Adjustable Wall Pack

eZ SPEC

L70 25°C 56,000 Hours

ELECTRICAL DATA

Model	Color Temperature	CRI [1]	Luminaire Lumens	Luminaire Watts	Lumens/ Watt	Input Voltage[2]	Input Current (A)			Power Factor	THD [3]	L_{70} Hours[4]
							120V	240V	277V			
WPA-3L-4K	4000k	>80	2,680	23	116	120-277	0.19	0.10	0.08	>0.90	<20%	56,000
WPA-3L-5K	5000k	>80	2,693	23	118	120-277	0.19	0.10	0.08	>0.90	<20%	56,000
WPA-4L-4K	4000k	>80	4,234	37	114	120-277	0.31	0.16	0.13	>0.90	<20%	56,000
WPA-4L-5K	5000k	>80	4,254	37	114	120-277	0.31	0.16	0.13	>0.90	<20%	56,000
WPA-7L-4K	4000k	>80	6,601	58	114	120-277	0.48	0.24	0.21	>0.90	<20%	56,000
WPA-7L-5K	5000k	>80	6,626	57	116	120-277	0.48	0.24	0.21	>0.90	<20%	56,000
WPA-8L-4K	4000k	>80	8,014	71	113	120-277	0.59	0.29	0.26	>0.90	<20%	56,000
WPA-8L-5K	5000k	>80	8,078	71	114	120-277	0.59	0.30	0.26	>0.90	<20%	56,000
WPA-11L-4K	4000k	>80	10,752	93	116	120-277	0.78	0.39	0.34	>0.90	<20%	56,000
WPA-11L-5K	5000k	>80	10,824	93	116	120-277	0.78	0.39	0.34	>0.90	<20%	56,000

[1] Color rendering index.
[2] All 50-60Hz.
[3] Total harmonic distortion.
[4] L_{70} refers to the number of hours at which lumen output declines to 70% of the initial level. L_{70} hours are IES TM-21-11 calculated hours.

PHOTOMETRIC DATA

WPA-3L-4K

Luminaire Data

Description	Adjustable Wall Pack 3L, 4K
Total Lumens	2,680
Input Wattage	23
Efficacy (lm/W)	117
Max. Cd.	1413.96 (360H, 22V)
IES Classification	Type II
Longitudinal Classification	Very Short

Zonal Lumen Summary

Zone	Lumens	%Fixt
0-30°	824	30.8%
0-60°	2,217	82.7%
0-80°	2,652	98.9%
80-90°	28	1.1%*
0-90°	2,680	100.0%
90-110°	0	0.0%
110-180°	0	0.0%
0-180°	2,680	100.0%

Luminaire Classification Systems (LCS)

LCS Zone		Lumens	%Lum
FL	0-30	520	19.4%
FM	30-60	993	37.1%
FH	60-80	316	11.8%
FVH	80-90	21	0.8%
BL	0-30	305	11.4%
BM	30-60	399	14.9%
BH	60-80	118	4.4%
BVH	80-90	7	0.3%
UL	90-100	0	0.0%
UH	100-180	0	0.0%
Total		2,680	99.9%
BUG Rating		B1-U0-G1	

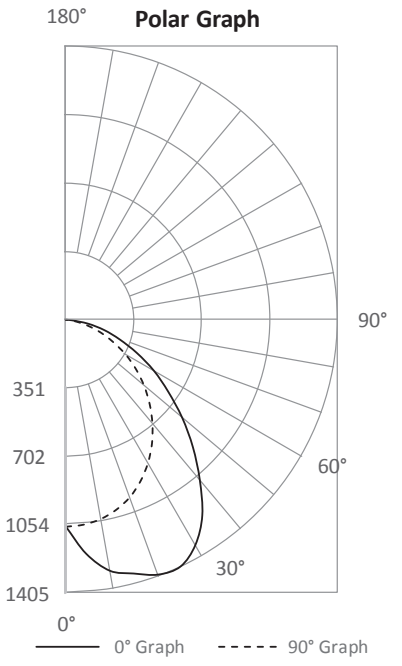

* 80-90° glare zone is calculated by dividing the lumens in that zone by the lumen total in the 0-90° zone

PHOTOMETRIC DATA

WPA-4L-4K

Luminaire Data

Description	Adjustable Wall Pack 4L, 4K
Total Lumens	4,234
Input Wattage	37
Efficacy (lm/W)	114
Max. Cd.	2251.44 (360H, 23V)
IES Classification	Type II
Longitudinal Classification	Very Short

Zonal Lumen Summary

Zone	Lumens	%Fixt
0-30°	1,347	31.8%
0-60°	3,541	83.6%
0-80°	4,196	99.1%
80-90°	38	0.9%*
0-90°	4,234	100.0%
90-110°	0	0.0%
110-180°	0	0.0%
0-180°	4,234	100.0%

Luminaire Classification Systems (LCS)

LCS Zone		Lumens	%Lum
FL	0-30	836	19.8%
FM	30-60	1,531	36.2%
FH	60-80	462	10.9%
FVH	80-90	26	0.6%
BL	0-30	511	12.1%
BM	30-60	663	15.7%
BH	60-80	192	4.5%
BVH	80-90	12	0.3%
UL	90-100	0	0.0%
UH	100-180	0	0.0%
Total		4,234	100.0%
BUG Rating		B2-U0-G1	

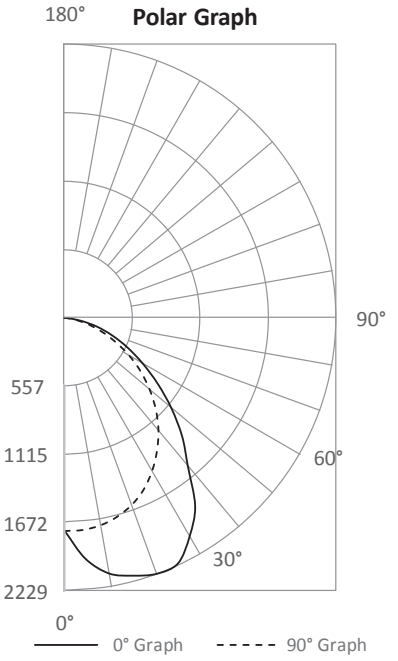

* 80-90° glare zone is calculated by dividing the lumens in that zone by the lumen total in the 0-90° zone

WPA-7L-4K

Luminaire Data

Description	Adjustable Wall Pack 7L, 4K
Total Lumens	6,601
Input Wattage	58
Efficacy (lm/W)	114
Max. Cd.	3506.76 (360H, 23V)
IES Classification	Type II
Longitudinal Classification	Very Short

Zonal Lumen Summary

Zone	Lumens	%Fixt
0-30°	2,048	31.0%
0-60°	5,464	82.8%
0-80°	6,527	98.9%
80-90°	74	1.1%*
0-90°	6,601	100.0%
90-110°	0	0.0%
110-180°	0	0.0%
0-180°	6,601	100.0%

Luminaire Classification Systems (LCS)

LCS Zone		Lumens	%Lum
FL	0-30	1,286	19.5%
FM	30-60	2,388	36.2%
FH	60-80	752	11.4%
FVH	80-90	53	0.8%
BL	0-30	762	11.5%
BM	30-60	1,028	15.6%
BH	60-80	311	4.7%
BVH	80-90	21	0.3%
UL	90-100	0	0.0%
UH	100-180	0	0.0%
Total		6,601	100.0%
BUG Rating		B2-U0-G1	

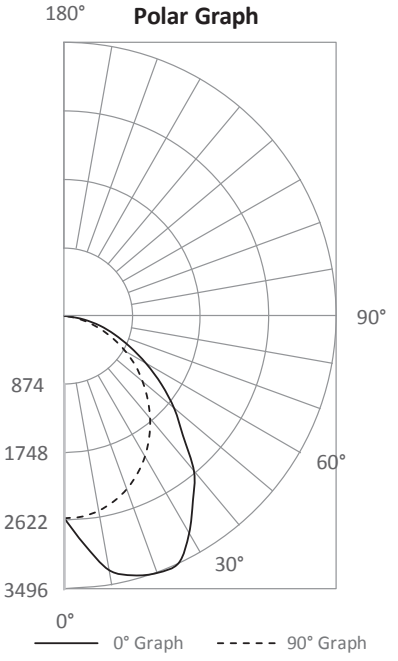

* 80-90° glare zone is calculated by dividing the lumens in that zone by the lumen total in the 0-90° zone

PHOTOMETRIC DATA

WPA-8L-4K

Luminaire Data

Description	Adjustable Wall Pack 8L, 4K
Total Lumens	8,014
Input Wattage	71
Efficacy (lm/W)	113
Max. Cd.	4284.82 (360H, 23V)
IES Classification	Type II
Longitudinal Classification	Very Short

Zonal Lumen Summary

Zone	Lumens	%Fixt
0-30°	2,462	30.7%
0-60°	6,611	82.5%
0-80°	7,922	98.9%
80-90°	92	1.1%*
0-90°	8,014	100.0%
90-110°	0	0.0%
110-180°	0	0.0%
0-180°	8,014	100.0%

Luminaire Classification Systems (LCS)

LCS Zone		Lumens	%Lum
FL	0-30	1,554	19.4%
FM	30-60	2,926	36.5%
FH	60-80	937	11.7%
FVH	80-90	66	0.8%
BL	0-30	908	11.3%
BM	30-60	1,223	15.3%
BH	60-80	375	4.7%
BVH	80-90	26	0.3%
UL	90-100	0	0.0%
UH	100-180	0	0.0%
Total		8,014	100.0%
BUG Rating		B2-U0-G1	

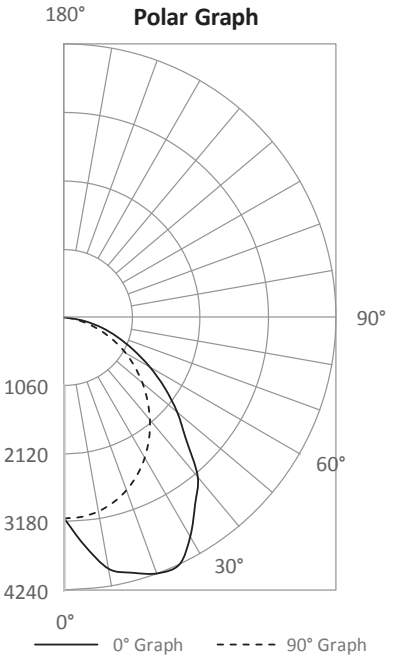

* 80-90° glare zone is calculated by dividing the lumens in that zone by the lumen total in the 0-90° zone

WPA-11L-4K

Luminaire Data

Description	Adjustable Wall Pack 11L ,4K
Total Lumens	10,752
Input Wattage	93
Efficacy (lm/W)	116
Max. Cd.	5826.22 (360H, 25V)
IES Classification	Type II
Longitudinal Classification	Very Short

Zonal Lumen Summary

Zone	Lumens	%Fixt
0-30°	3,459	32.2%
0-60°	9,020	83.9%
0-80°	10,642	99.0%
80-90°	110	1%*
0-90°	10,752	100.0%
90-110°	0	0.0%
110-180°	0	0.0%
0-180°	10,752	100.0%

Luminaire Classification Systems (LCS)

LCS Zone		Lumens	%Lum
FL	0-30	2,153	20.0%
FM	30-60	3,866	35.9%
FH	60-80	1,129	10.5%
FVH	80-90	78	0.7%
BL	0-30	1,307	12.2%
BM	30-60	1,694	15.8%
BH	60-80	494	4.6%
BVH	80-90	32	0.3%
UL	90-100	0	0.0%
UH	100-180	0	0.0%
Total		10,752	99.8%
BUG Rating		B3-U0-G1	

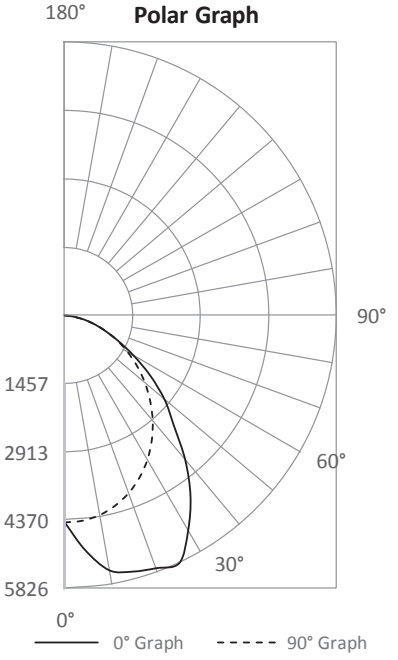

* 80-90° glare zone is calculated by dividing the lumens in that zone by the lumen total in the 0-90° zone