ULTA™
NSF, IP66, COLD STORAGE, HIGH BAY UNIT

LEDALUX®

eZ SPEC

CATALOG NUMBER:

NOTES:

FIXTURE TYPE:

PROJECT:

L70 25°C 72,000 Hours

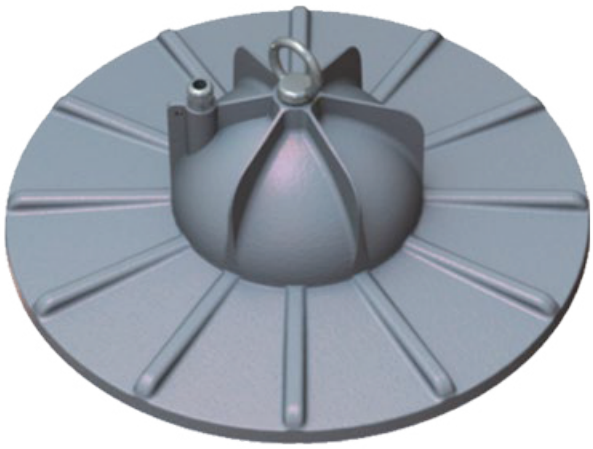

FOOD & BEVERAGE PROCESSING | MANUFACTURING & DISTRIBUTION | LIVESTOCK FARMING

PRODUCT DESCRIPTION

The Ulta is designed for the harsh environments found in food processing, heavy manufacturing, cold storage, warehouse, and distribution facilities. The IP66 waterproof rated fixture can operate in extreme temperature ranges. This fixture is ideal for new construction or as an upgrade on existing linear fluorescent and HID high-bay fixtures

EMERGENCY BATTERY BACKUP

Option for Ulta 16L/100W and 24L/150W fixtures:

- Minimum 90-Minute Duration
- 16W 2560 Lumen
- Temperature Range from 50° to 122°F (10° to 50°C)

PERFORMANCE	
Lumen Output	16,000-24,000 lumens
Lifespan	L70 > 72,000 Hours
Ambient Temperature	-40°F to 131°F (-40°C to 55°C)
Warranty	5 Years
Efficacy	Up to 160 LPW
Power Washing	Up to 1600 PSI

ELECTRICAL	
Operating Voltage	120-277V
Input Frequency	50/60Hz
Input Wattage	100-150W
Surge Protection	4 kV (10kA or 20kA optional)
Dimming	4 kV (10kA or 20kA optional)
Power Input	Standard 6' Yellow Cable (5-conductor wire to pigtails)

CONSTRUCTION	
IP Rating	IP66
IK Rating	IK10
Weight	15.5lbs (7 kg)
Dimensions	5.4"H x 17.9"W
Housing	Die Casted Aluminum Alloy
Finish	Common Epoxy Resin Powder Coat
Lens	Polycarbonate

OPTICAL	
CRI	≥80 (90 Optional)
CCT	4000K, 5000K
Beam Angle	90°

NSF IP66 c UL us LISTED USDA

We have custom and standard manufacturing options. Use this form to build your part number or reach out to our sales team for assistance.

GET YOUR PRODUCTS FASTER WITH OUR QUICK SHIP PROGRAM

Multiple USA locations = 98-3-1 Quick Ship Program
98% Fill Rate – 3 Day Lead Time – 1 Piece Minimum Order

ORDERING INFORMATION

EXAMPLE: ULTA-24L-MD-MV-S1-C1-50K-80-RM-G-P5

Model	Lumen Pkg	Distribution	Voltage	Internal Surge Protector	Control Option	CCT	CRI	Mounting	Finish
ULTA = Ultra High-Bay	16L =16,000 Lumens 24L =24,000 Lumens	MD=Medium (90°)	MV=120-277v	Leave Blank = Standard 10kV S1 =10kA SP 120-277V S2 =20kA SP 120-277V	Leave Blank = No Controls C1 =Programmable Internal Motion Sensor	40K =4000K 50K =5000K	80=80 CRI 90=90 CRI	RM=Ring Mount HK =Hook Mount PM=Pendant Mount	G=Gray

OPTIONS & ACCESSORIES

Options

Options	Description
EM	Emergency Battery Backup *see restrictions*
YX	5 conductor yellow wire that is X feet long
WX	5 conductor white wire that is X feet long
S10	10´ Aircraft Safety Cable
S16	16´ Aircraft Safety Cable

Plugs

Plugs	Description
P3	3pin Mini Connector Male Plug
P5	5pin Mini Connector Male Plug
5P	120v Plug Δ
L6P	Locking 208/240v Plug Δ
L7P	Locking 277v Plug Δ
W5P	Watertite 120v Plug
W6P	Watertite Locking 208/240v Plug
W7P	Watertite Locking 277v Plug

Cordsets (Order Separately)

Order Code	Description
MIN-3FP-6	3 Conductor Female 6' Cable to Pigtails
MIN-5FP-6	5 conductor Female 6' Cable to pigtails
MIN-3MFP-6	3 conductor Female 6' Cable to Male
MIN-5MFP-6	5 Conductor Female 6' Cable to Male

Δ Option Value Ordering Restrictions

- EM Backup temperature range 10-50°C (50-122°F)
- Plug Options 5P, L6P, L7P are not IP rated
- Cordset options are only suitable for M3/M5 bulkhead options

ULTRA CHARACTERISTICS

Lumen Package	Wattage		Amp Draw		Diameter	Depth	Depth with Ring	Comparable Light Source
	120V	277V	120V	277V				
16L	99	97	0.83	0.37	17.93"	5.35"	7.37"	250W MH, 6-lamp T8 HBF, 4-lamp T5HO
24L	156	153	1.31	0.58	17.93"	5.35"	7.37"	400W MH, 6-lamp T5HO

AMBIENT TEMPERATURE RATINGS

Lumen Package	Fixture	with MS	with EM
16L | 24L	-40°C to 55°C	-40°C to 55°C	10°C to 50°C

ULTRA EMERGENCY BACKUP INFORMATION (5000K, CRI)

Lens	FX Order Code	EM Manufacturer	EM Driver Part	EM Battery Part	Field Installable	Lumen Output
Medium	EM	Fulham	FHS2-UNV-36L	FHSBATL6-1.5	No	2560LM

Ulta MD Light Distribution

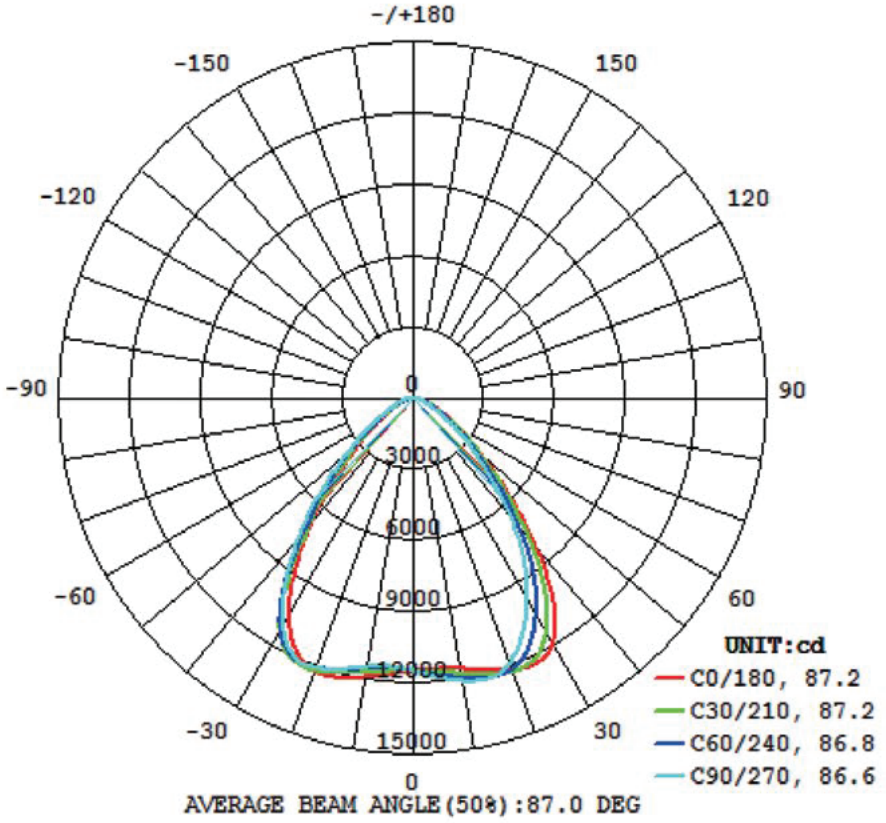

SURGE PROTECTION DEVICE INFORMATION

Order Code	S1	S2
Model	SP1	PU-20KS10KHT
Manufacturer	Philips	Inventronics
Operating Voltage	120-277V	120-277V
Input Frequency	50/60Hz	50/60Hz
Maximum Discharge Current (Imax)	10kA, 8/20µs	20kA, 8/20µs
Nominal Discharge Current (In)		10kA, 8/20µs
Open Circuit Voltage		20kV
Measured Limiting Voltage (L-N)		2600V
Measured Limiting Voltage (L-G, N-G)		2000V
Net Weight		50g
Operating Temperature		-40ºC to 85ºC
Dimensions		0.6"x1.1"x11.8"
Number of Surges		
20 kA		1
10 kA		15
4 kA		100
2 kA		500
1 kA		1,000

WIRING DIAGRAM

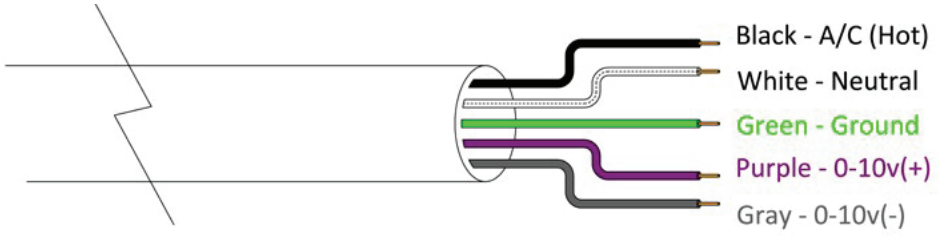

EMERGENCY WIRING DIAGRAM

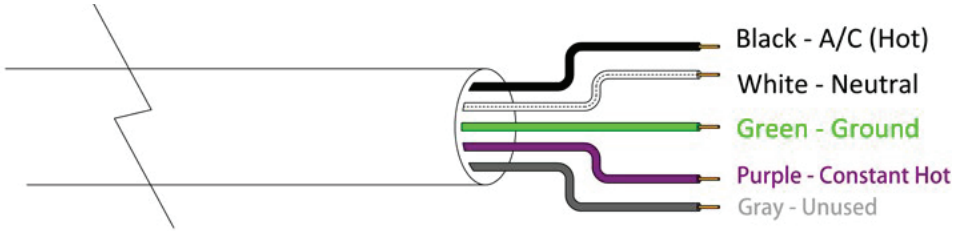

DIMENSIONAL DATA

Ulta with Ring

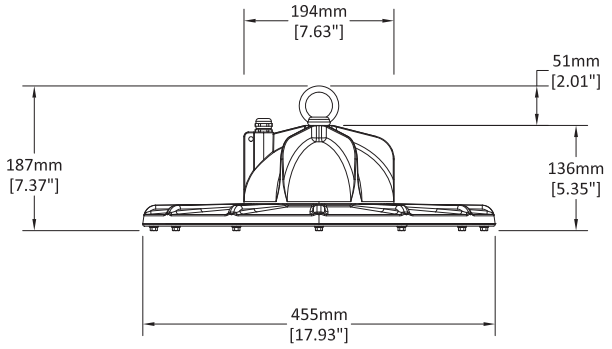

Ulta with Hook

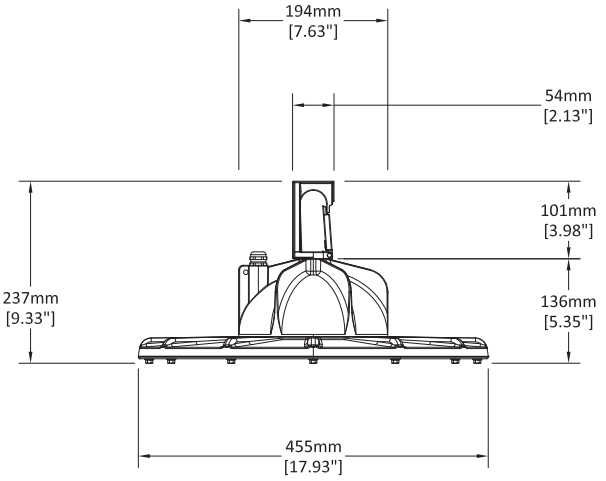

Ulta with EM and Ring

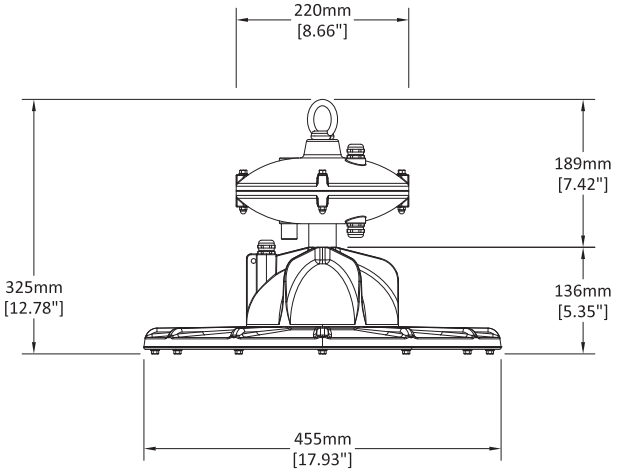

Ulta with EM and Hook

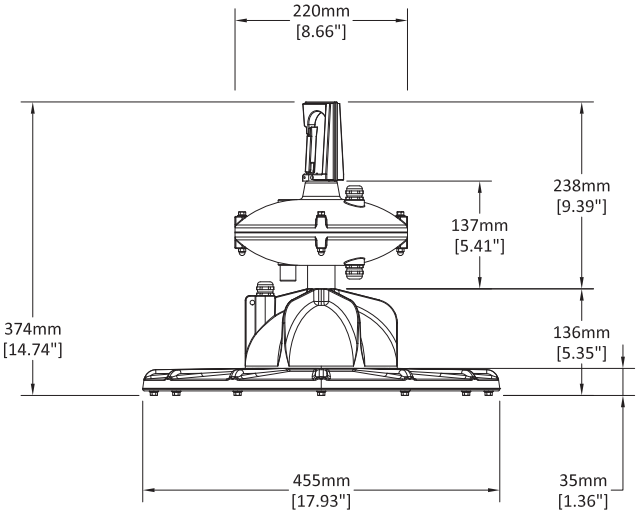

Bottom View

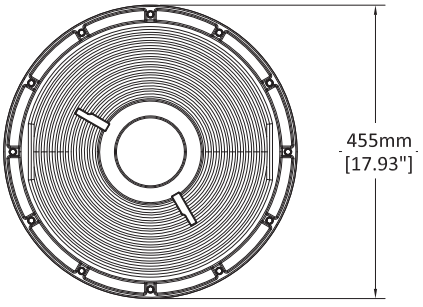

Ultra with Pendant Mount

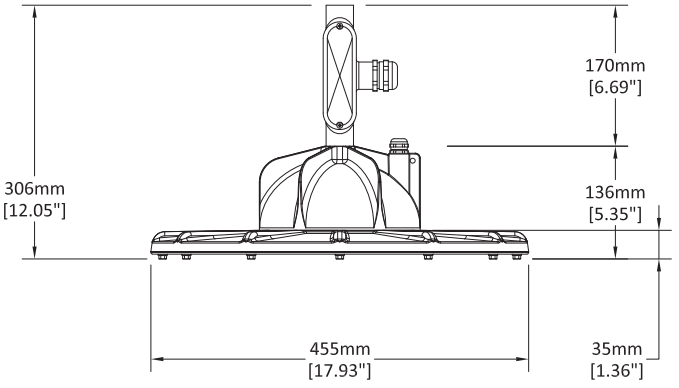

BI-LEVEL MICROWAVE SENSOR - BRI820 - SENSOR COVERAGE

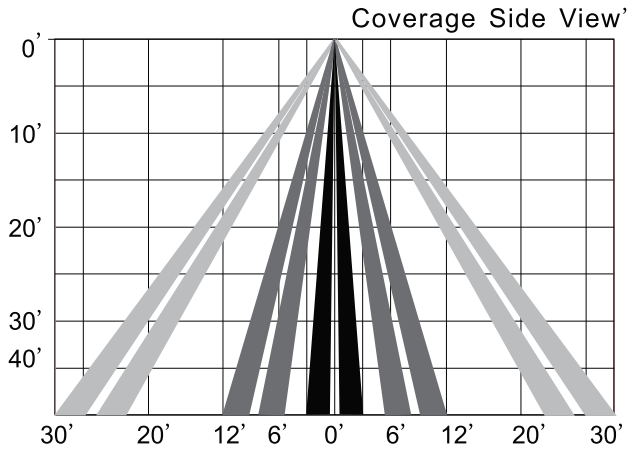

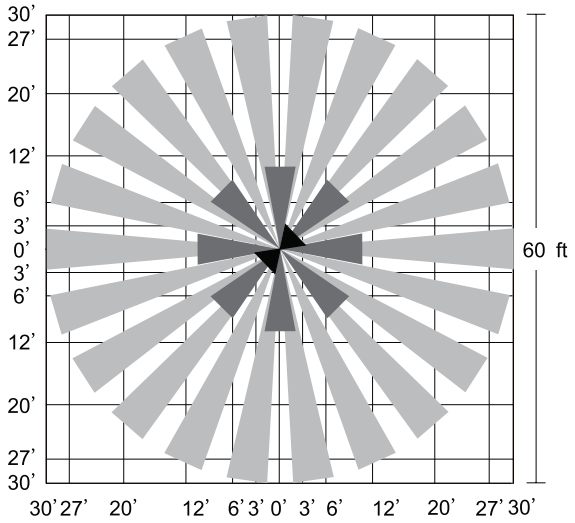

SENSOR OPTIONS

Options	Functions	Description
Brightness	70% / 80% / 90% / 100%	The time the fixture remains at programmed light level if motion is not detected
Hold Time	10s / 1m / 5m / 10m / 15m / 20m / 30m / 60m	
Sensitivity	20% / 50% / 75% / 100%	Sensitivity of occupancy sensor
StandBy Time	1m / 30m / 60m	Step dimming options after fixture does not detect movement
Stand by Dim	0% / 10% / 30% / 50%	

PACKAGING DIMENSIONS

	Box	Pallet
Qty - FIXTURES	1	40
Size	19˝L x 19˝W x 8˝H	48"L x 40"W x 86"H
Weight	18lbs	750lbs