LEDALUX®

MPAL - Multi-Purpose Area Luminaires

eZ SPEC

L70 25°C 149,000 Hours

CATALOG NUMBER:

NOTES:

FIXTURE TYPE:

PROJECT:

WARRANTY & LISTINGS

- cULus listed for wet locations in ambient temperatures from -40°C to 45°C (-40°F to 113°F).
- DLC premium approved.
- Rated for 3G vibration.
- Lenses are rated IK10.
- Input transient surge protection (6kV).
- Complies with FCC Part 15, class B.
- IP66 rated for ingress protection.
- 5-year warranty of all electronics and housing.

FEATURES

- Available in 4000k (neutral white) and 5000k (cool white) color temperatures.*
- Long-life LEDs provide 149,000 hours of operation with at least 70% of initial lumen output (L70), and 44,000 hours with at least 90% of initial lumen output (L90).**
- LED chromaticity based on < 6-step ANSI quadrangles.
- LED color maintenance < 0.002 chromaticity shift (Δu'v') over the initial 6,000 hours of operation.
- Provides a range of 13,000 to 39,000 nominal lumens and draws 100-300 nominal watts.*
- IES roadway distributions include types III & V.
- Universal 120-277V (50/60Hz) or 347-480V (50/60Hz) AC voltage with 6-foot incoming power cords.
- 1-10vdc dimming drivers, which provide continuous dimming to 10% of maximum lumen output, are standard.
- Watertight, compression-type electrical connectors.
- Power factor > 0.90.
- Total harmonic distortion < 20%.
- Color rendering index (Ra) > 80. Red color rendering > 6.
- Optional NEMA photocell receptables & photocells.
- Die cast aluminum housing with dark bronze powder coat finish.
- PMMA lens.
- Bullhorns & wall mounts available. See page 3.
- Easy installation in new construction or retrofit.

* Contact factory for other color temperatures and lumen packages.
** L70 hours are IES TM-21-11 calculated hours.

MOUNTING OPTIONS

Yoke

Trunnion

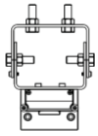

Arm

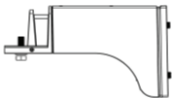

Slip-Fitter

NEMA PHOTOCELL

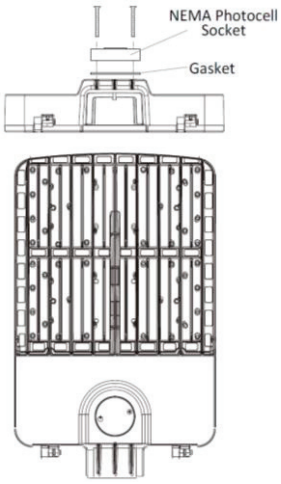

ORDERING INFORMATION

EXAMPLE: MPAL-20L-5K-T3-P

Series	Lumen Output	Color Temperature	Distribution	Input Voltage	NEMA Photocell Receptacle	Mounting Means (One Required - Order Separately)
MPAL	13L = 13,000 20L = 20,000 26L = 26,000 31L = 31,000 39L = 39,000	4K = 4000k 5K = 5000k	T3 = Type III T5 = Type V	Blank = 120-277 UNC = 347-480 UNC = 31L & 39L models only	Blank = No receptacle P = 3-pin NEMA photocell receptable	MPAL-ARM-S = Arm mount, square poles MPAL-ARM-R = Arm mount, round poles MPAL-SF = Slip-fitter mount MPAL-TM = Trunnion mount MPAL-YM = Yoke mount

LED Eco-Smart IP66 FC DLC PREMIUM WET cULus

ELECTRICAL DATA

Model	Color Temp.	CRI [1]	Luminaire Lumens	Luminaire Watts	Lumens Per Watt	Input Voltage[2]	Input Current (A)			Power Factor	THD [3]	L_{70} Hours [4]
							120V	240V 277V	277V 480V			
MPAL-13L-4K-T3	4000k	> 80	13,333	99	135	120-277	0.82	0.41	0.36	> 90%	< 20%	149,000
MPAL-13L-5K-T3	5000k	> 80	13,420	99	136	120-277	0.82	0.41	0.36	> 90%	< 20%	149,000
MPAL-13L-4K-T5	4000k	> 80	13,268	99	134	120-277	0.82	0.41	0.36	> 90%	< 20%	149,000
MPAL-13L-5K-T5	5000k	> 80	13,470	100	135	120-277	0.83	0.42	0.36	> 90%	< 20%	149,000
MPAL-20L-4K-T3	4000k	> 80	19,515	148	132	120-277	1.24	0.62	0.54	> 90%	< 20%	149,000
MPAL-20L-5K-T3	5000k	> 80	20,024	147	137	120-277	1.22	0.61	0.53	> 90%	< 20%	149,000
MPAL-20L-4K-T5	4000k	> 80	19,605	149	132	120-277	1.24	0.62	0.54	> 90%	< 20%	149,000
MPAL-20L-5K-T5	5000k	> 80	19,843	148	134	120-277	1.23	0.62	0.54	> 90%	< 20%	149,000
MPAL-26L-4K-T3	4000k	> 80	26,082	203	129	120-277	1.69	0.84	0.73	> 90%	< 20%	149,000
MPAL-26L-5K-T3	5000k	> 80	26,305	203	129	120-277	1.69	0.85	0.73	> 90%	< 20%	149,000
MPAL-26L-4K-T5	4000k	> 80	26,040	202	129	120-277	1.68	0.84	0.73	> 90%	< 20%	149,000
MPAL-26L-5K-T5	5000k	> 80	26,343	203	130	120-277	1.69	0.85	0.73	> 90%	< 20%	149,000
MPAL-31L-4K-T3	4000k	> 80	30,273	232	131	120-277	1.93	0.97	0.84	> 90%	< 20%	149,000
MPAL-31L-5K-T3	5000k	> 80	31,324	230	136	120-277	1.92	0.96	0.83	> 90%	< 20%	149,000
MPAL-31L-4K-T5	4000k	> 80	31,298	232	135	120-277	1.93	0.97	0.84	> 90%	< 20%	149,000
MPAL-31L-5K-T5	5000k	> 80	32,395	240	135	120-277	2.00	1.00	0.87	> 90%	< 20%	149,000
MPAL-39L-4K-T3	4000k	> 80	39,480	297	133	120-277	2.47	1.24	1.07	> 90%	< 20%	149,000
MPAL-39L-5K-T3	5000k	> 80	39,587	287	138	120-277	2.39	1.20	1.04	> 90%	< 20%	149,000
MPAL-39L-4K-T5	4000k	> 80	39,577	297	133	120-277	2.47	1.24	1.07	> 90%	< 20%	149,000
MPAL-39L-5K-T5	5000k	> 80	39,814	288	138	120-277	2.40	1.20	1.04	> 90%	< 20%	149,000
MPAL-31L-4K-T3-UNC	4000k	> 80	30,100	234	129	277-480	N/A	0.84	0.49	> 90%	< 20%	149,000
MPAL-31L-5K-T3-UNC	5000k	> 80	30,617	231	133	277-480	N/A	0.83	0.48	> 90%	< 20%	149,000
MPAL-31L-4K-T5-UNC	4000k	> 80	30,912	234	132	277-480	N/A	0.84	0.49	> 90%	< 20%	149,000
MPAL-31L-5K-T5-UNC	5000k	> 80	31,614	231	137	277-480	N/A	0.83	0.48	> 90%	< 20%	149,000
MPAL-39L-4K-T3-UNC	4000k	> 80	39,880	311	128	277-480	N/A	1.12	0.65	> 90%	< 20%	149,000
MPAL-39L-5K-T3-UNC	5000k	> 80	40,431	307	132	277-480	N/A	1.11	0.64	> 90%	< 20%	149,000
MPAL-39L-4K-T5-UNC	4000k	> 80	40,155	311	129	277-480	N/A	1.12	0.65	> 90%	< 20%	149,000
MPAL-39L-5K-T5-UNC	5000k	> 80	40,705	307	133	277-480	N/A	1.11	0.64	> 90%	< 20%	149,000

[1] Color rendering index.

[2] All 50-60Hz.

[3] Total harmonic distortion.

[4] L_{70} refers to the number of hours at which lumen output declines to 70% of the initial level. L_{70} hours are IES TM-21-11 calculated hours.

DIMENSIONS

13L, 20L, & 26L models (12 lbs)

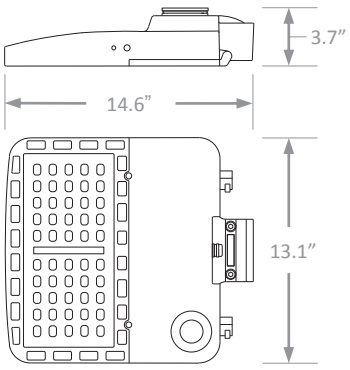

31L & 39L models (17 lbs)

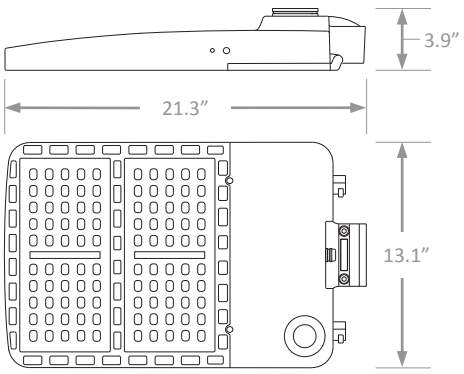

EFFECTIVE PROJECTED AREAS (EPA'S)

13L, 20L, & 26L

Front = 0.3 square feet
Side = 0.3 square feet
Face = 1.2 square feet

31L & 39L

Front = 0.3 square feet
Side = 0.3 square feet
Face = 1.9 square feet

MOUNTING ACCESSORIES

Wall Mount Bracket
LEDMPALPRO-WMB

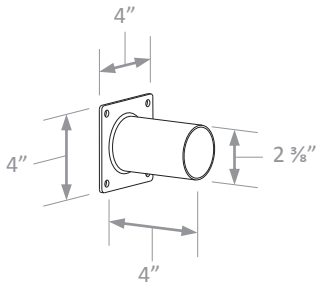

Wall Mount Bracket, 90°
LEDMPALPRO-WMB90

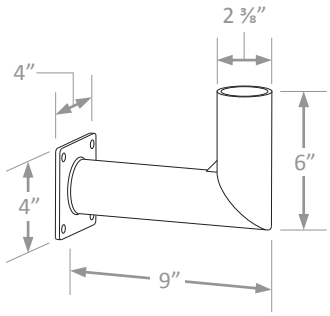

Double 180° Bullhorn Mounting Bracket
LEDMPALPRO-D180BH

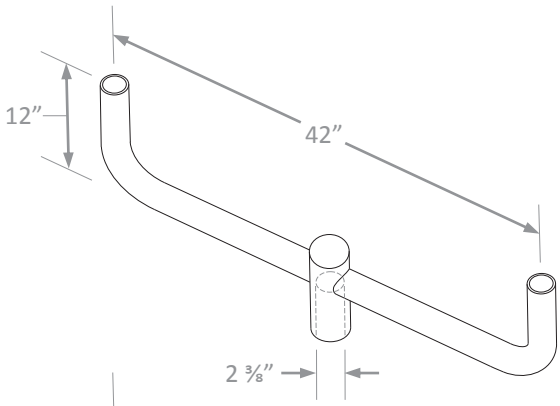

Triple 180° Bullhorn Mounting Bracket
LEDMPALPRO-T180BH

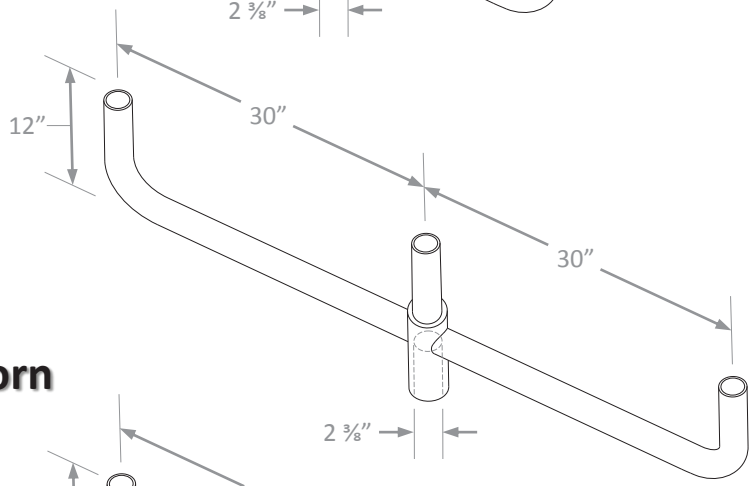

Quadruple 180° Bullhorn Mounting Bracket
LEDMPALPRO-Q180BH

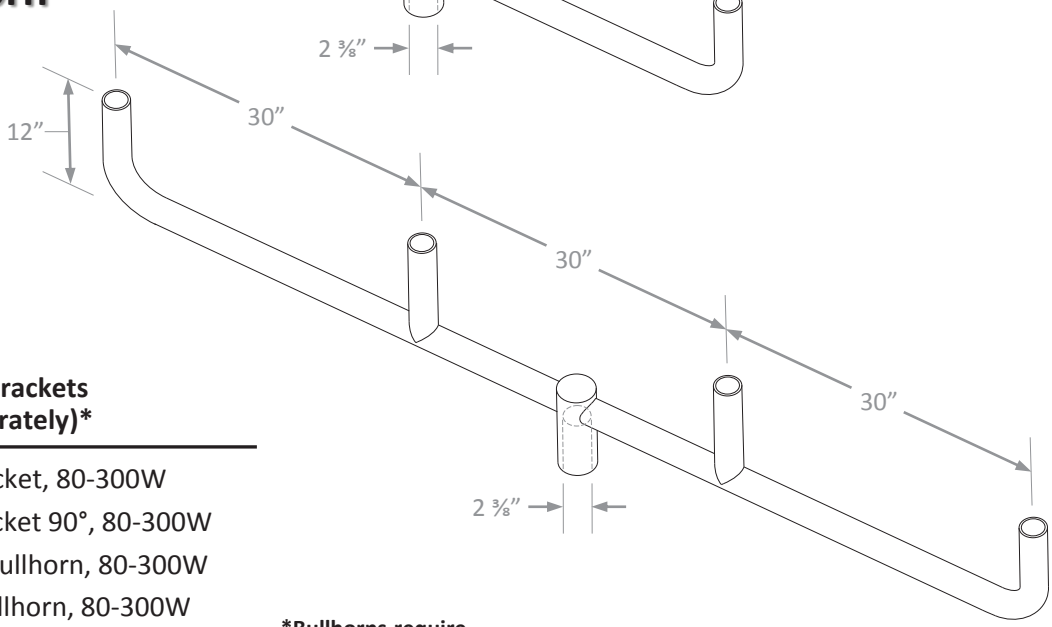

Mounting Brackets (Order Separately)*	
LEDMPALPRO-WMB	Wall Bracket, 80-300W
LEDMPALPRO-WMB90	Wall bracket 90°, 80-300W
LEDMPALPRO-D180BH	Double bullhorn, 80-300W
LEDMPALPRO-T180BH	Triple bullhorn, 80-300W
LEDMPALPRO-Q180BH	Quadruple bullhorn, 80-300W

***Bullhorns require slip-fitter mount**

PHOTOMETRIC DATA

MPAL-13L-4K-T3

Luminaire Data

Description	Multi Purpose Area Light 13L, 4K
Total Lumens	13,333
Input Wattage	99
Efficacy (lm/W)	135
Max. Cd.	5039.02 (67.5H, 65V)
IES Classification	Type III
Longitudinal Classification	Short

Luminaire Classification Systems (LCS)

LCS Zone		Lumens	%Lum
FL	0-30	1,722	12.9%
FM	30-60	4,868	36.5%
FH	60-80	2,218	16.6%
FVH	80-90	18	0.1%
BL	0-30	1,258	9.4%
BM	30-60	2,491	18.7%
BH	60-80	735	5.5%
BVH	80-90	22	0.2%
UL	90-100	0	0.0%
UH	100-180	0	0.0%
Total		13,333	100.0%
BUG Rating		B3-U0-G2	

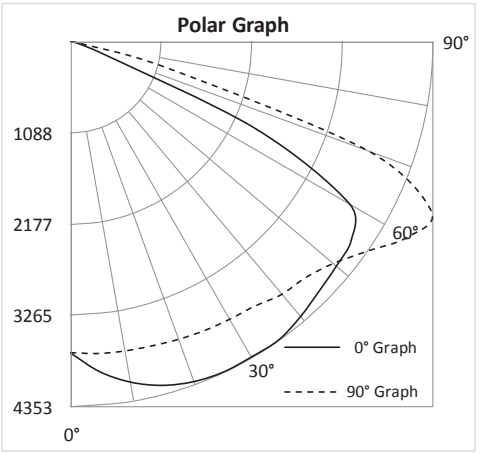

MPAL-13L-4K-T5

Luminaire Data

Description	Multi Purpose Area Light 13L, 4K
Total Lumens	13,268
Input Wattage	99
Efficacy (lm/W)	134
Max. Cd.	6871.1 (135H, 28V)
IES Classification	Type VS
Longitudinal Classification	Very Short

Luminaire Classification Systems (LCS)

LCS Zone		Lumens	%Lum
FL	0-30	2,247	16.9%
FM	30-60	3,956	29.8%
FH	60-80	220	1.7%
FVH	80-90	14	0.1%
BL	0-30	2,296	17.3%
BM	30-60	4,270	32.2%
BH	60-80	246	1.9%
BVH	80-90	18	0.1%
UL	90-100	0	0.0%
UH	100-180	0	0.0%
Total		13,268	100.0%
BUG Rating		B3-U0-G1	

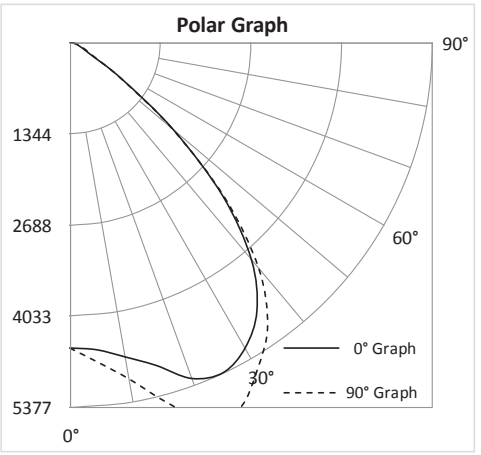

MPAL-20L-4K-T3

Luminaire Data

Description	Multi Purpose Area Light 20L, 4K
Total Lumens	19,515
Input Wattage	148
Efficacy (lm/W)	132
Max. Cd.	6703.88 (360H, 36V)
IES Classification	Type III
Longitudinal Classification	Very Short

Luminaire Classification Systems (LCS)

LCS Zone		Lumens	%Lum
FL	0-30	2,368	12.1%
FM	30-60	6,766	34.7%
FH	60-80	3,075	15.8%
FVH	80-90	104	0.5%
BL	0-30	1,878	9.6%
BM	30-60	3,792	19.4%
BH	60-80	1,460	7.5%
BVH	80-90	73	0.4%
UL	90-100	0	0.0%
UH	100-180	0	0.0%
Total		19,515	100.0%
BUG Rating		B3-U0-G3	

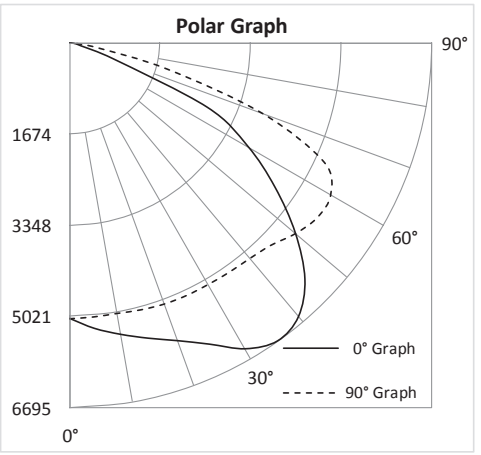

PHOTOMETRIC DATA

MPAL-20L-4K-T5

Luminaire Data

Description	Multi Purpose Area Light 20L, 4K
Total Lumens	19,605
Input Wattage	149
Efficacy (lm/W)	132
Max. Cd.	5660.15 (360H, 42V)
IES Classification	Type VS
Longitudinal Classification	Very Short

Luminaire Classification Systems (LCS)

LCS Zone		Lumens	%Lum
FL	0-30	1,936	9.9%
FM	30-60	5,865	29.9%
FH	60-80	1,997	10.2%
FVH	80-90	64	0.3%
BL	0-30	1,884	9.6%
BM	30-60	5,810	29.6%
BH	60-80	1,971	10.1%
BVH	80-90	78	0.4%
UL	90-100	0	0.0%
UH	100-180	0	0.0%
Total		19,605	100.0%
BUG Rating		B4-U0-G2	

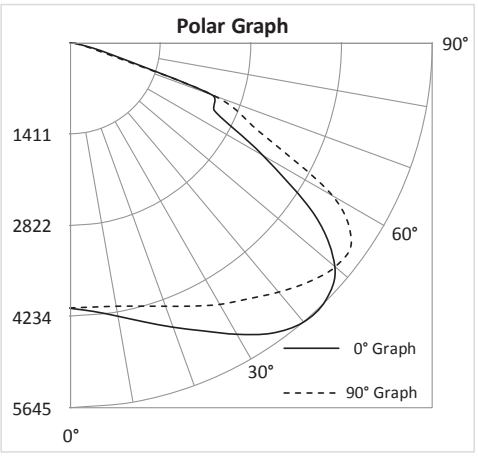

MPAL-26L-4K-T3

Luminaire Data

Description	Multi Purpose Area Light 26L, 4K
Total Lumens	26,082
Input Wattage	203
Efficacy (lm/W)	129
Max. Cd.	8473.64 (270H, 67V)
IES Classification	Type III
Longitudinal Classification	Medium

Luminaire Classification Systems (LCS)

LCS Zone		Lumens	%Lum
FL	0-30	2,378	9.1%
FM	30-60	8,125	31.1%
FH	60-80	4,481	17.2%
FVH	80-90	216	0.8%
BL	0-30	2,074	8.0%
BM	30-60	5,769	22.1%
BH	60-80	2,990	11.5%
BVH	80-90	48	0.2%
UL	90-100	0	0.0%
UH	100-180	0	0.0%
Total		26,082	100.0%
BUG Rating		B4-U0-G4	

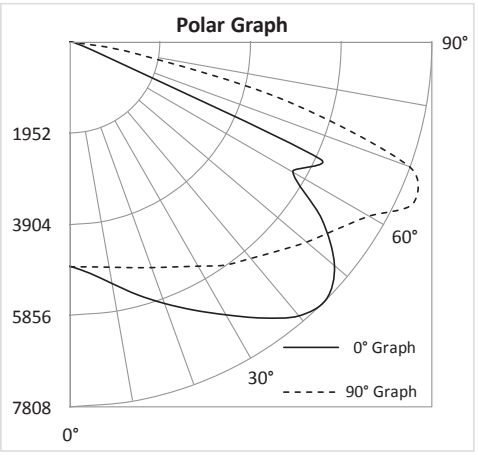

MPAL-26L-4K-T5

Luminaire Data

Description	Multi Purpose Area Light 26L, 4K
Total Lumens	26,040
Input Wattage	202
Efficacy (lm/W)	129
Max. Cd.	7547.23 (360H, 43V)
IES Classification	Type VS
Longitudinal Classification	Very Short

Luminaire Classification Systems (LCS)

LCS Zone		Lumens	%Lum
FL	0-30	2,549	9.8%
FM	30-60	7,874	30.2%
FH	60-80	2,602	10.0%
FVH	80-90	101	0.4%
BL	0-30	2,574	9.9%
BM	30-60	7,818	30.0%
BH	60-80	2,434	9.3%
BVH	80-90	89	0.3%
UL	90-100	0	0.0%
UH	100-180	0	0.0%
Total		26,040	100.0%
BUG Rating		B4-U0-G2	

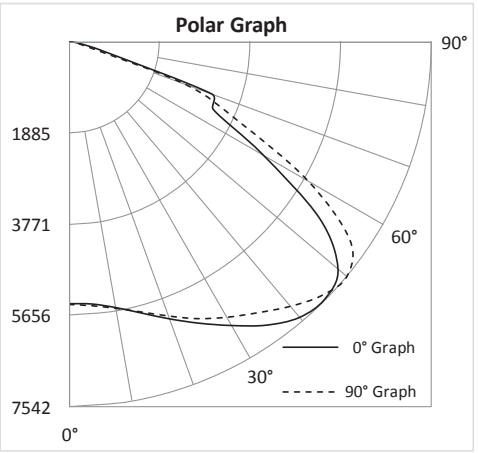

PHOTOMETRIC DATA

MPAL-31L-4K-T3

Luminaire Data

Description	Multi Purpose Area Light 31L, 4K
Total Lumens	30,273
Input Wattage	232
Efficacy (lm/W)	131
Max. Cd.	11752.82 (292.5H, 62V)
IES Classification	Type III
Longitudinal Classification	Short

Luminaire Classification Systems (LCS)

LCS Zone		Lumens	%Lum
FL	0-30	3,696	12.2%
FM	30-60	10,941	36.1%
FH	60-80	5,383	17.8%
FVH	80-90	53	0.2%
BL	0-30	2,791	9.2%
BM	30-60	5,690	18.8%
BH	60-80	1,657	5.5%
BVH	80-90	62	0.2%
UL	90-100	0	0.0%
UH	100-180	0	0.0%
Total		30,273	100.0%
BUG Rating		B4-U0-G3	

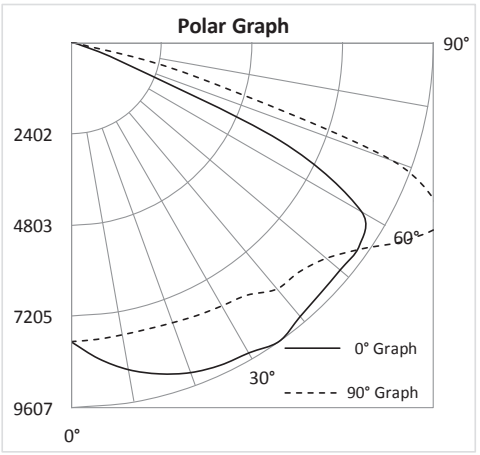

MPAL-31L-4K-T5

Luminaire Data

Description	Multi Purpose Area Light 31L, 4K
Total Lumens	31,298
Input Wattage	232
Efficacy (lm/W)	135
Max. Cd.	14130.88 (315H, 33V)
IES Classification	Type VS
Longitudinal Classification	Very Short

Luminaire Classification Systems (LCS)

LCS Zone		Lumens	%Lum
FL	0-30	5,318	17.0%
FM	30-60	10,291	32.9%
FH	60-80	554	1.8%
FVH	80-90	27	0.1%
BL	0-30	4,983	15.9%
BM	30-60	9,599	30.7%
BH	60-80	500	1.6%
BVH	80-90	26	0.1%
UL	90-100	0	0.0%
UH	100-180	0	0.0%
Total		31,298	100.0%
BUG Rating		B5-U0-G1	

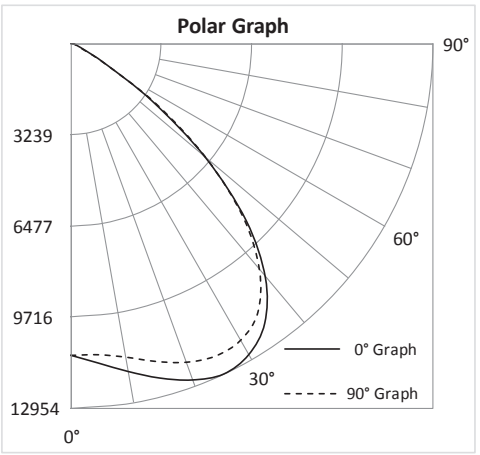

MPAL-39L-4K-T3

Luminaire Data

Description	Multi Purpose Area Light 39L, 4K
Total Lumens	39,480
Input Wattage	297
Efficacy (lm/W)	133
Max. Cd.	12478.89 (270H, 67V)
IES Classification	Type III
Longitudinal Classification	Medium

Luminaire Classification Systems (LCS)

LCS Zone		Lumens	%Lum
FL	0-30	3,716	9.4%
FM	30-60	12,304	31.2%
FH	60-80	6,608	16.7%
FVH	80-90	354	0.9%
BL	0-30	3,104	7.9%
BM	30-60	8,566	21.7%
BH	60-80	4,733	12.0%
BVH	80-90	95	0.2%
UL	90-100	0	0.0%
UH	100-180	0	0.0%
Total		39,480	100.0%
BUG Rating		B5-U0-G4	

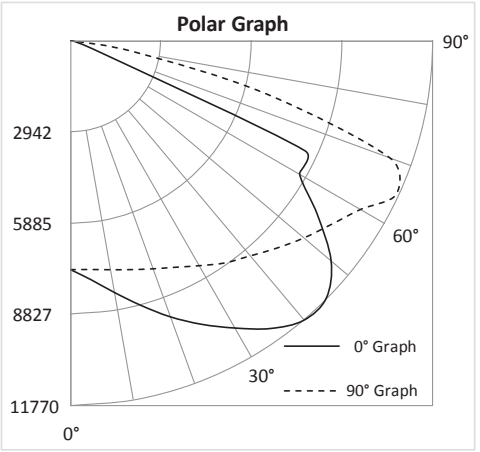

PHOTOMETRIC DATA

MPAL-39L-4K-T5

Luminaire Data

Description	Multi Purpose Area Light 39L, 4K
Total Lumens	39,577
Input Wattage	297
Efficacy (lm/W)	133
Max. Cd.	11321.97 (360H, 44V)
IES Classification	Type VS
Longitudinal Classification	Very Short

Luminaire Classification Systems (LCS)

LCS Zone		Lumens	%Lum
FL	0-30	3,813	9.6%
FM	30-60	11,770	29.7%
FH	60-80	4,160	10.5%
FVH	80-90	124	0.3%
BL	0-30	3,749	9.5%
BM	30-60	11,692	29.5%
BH	60-80	4,121	10.4%
BVH	80-90	147	0.4%
UL	90-100	0	0.0%
UH	100-180	0	0.0%
Total		39,577	100.0%
BUG Rating		B5-U0-G2	

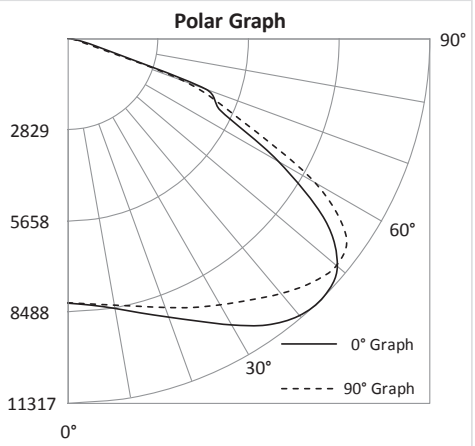

MPAL-31L-4K-T3-UNC

Luminaire Data

Description	Multi Purpose Area Light 31L, 4K
Total Lumens	30,100
Input Wattage	234
Efficacy (lm/W)	129
Max. Cd.	12417.05 (67.5H, 64V)
IES Classification	Type III
Longitudinal Classification	Short

Luminaire Classification Systems (LCS)

LCS Zone		Lumens	%Lum
FL	0-30	3,757	12.5%
FM	30-60	11,283	37.5%
FH	60-80	5,113	17.0%
FVH	80-90	46	0.2%
BL	0-30	2,846	9.5%
BM	30-60	5,557	18.5%
BH	60-80	1,448	4.8%
BVH	80-90	50	0.2%
UL	90-100	0	0.0%
UH	100-180	0	0.0%
Total		30,100	100.0%
BUG Rating		B4-U0-G3	

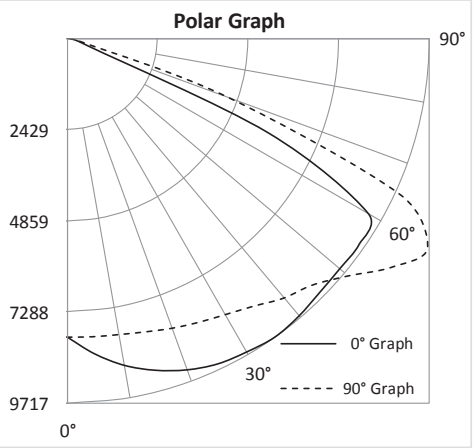

MPAL-31L-4K-T5-UNC

Luminaire Data

Description	Multi Purpose Area Light 31L, 4K
Total Lumens	30,912
Input Wattage	234
Efficacy (lm/W)	132
Max. Cd.	13822.08 (45H, 33V)
IES Classification	Type VS
Longitudinal Classification	Very Short

Luminaire Classification Systems (LCS)

LCS Zone		Lumens	%Lum
FL	0-30	5,129	16.6%
FM	30-60	10,202	33.0%
FH	60-80	616	2.0%
FVH	80-90	34	0.1%
BL	0-30	4,935	16.0%
BM	30-60	9,466	30.6%
BH	60-80	499	1.6%
BVH	80-90	31	0.1%
UL	90-100	0	0.0%
UH	100-180	0	0.0%
Total		30,912	100.0%
BUG Rating		B5-U0-G1	

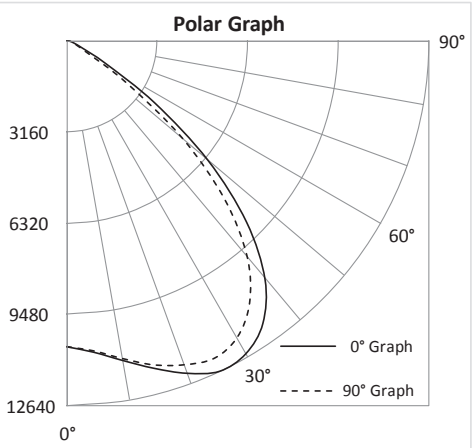

PHOTOMETRIC DATA

MPAL-39L-4K-T3-UNC

Luminaire Data

Description	Multi Purpose Area Light 39L, 4K
Total Lumens	39,880
Input Wattage	311
Efficacy (lm/W)	128
Max. Cd.	13216.58 (270H, 68V)
IES Classification	Type III
Longitudinal Classification	Medium

Luminaire Classification Systems (LCS)

LCS Zone		Lumens	%Lum
FL	0-30	3,521	8.8%
FM	30-60	12,191	30.6%
FH	60-80	6,880	17.3%
FVH	80-90	365	0.9%
BL	0-30	3,248	8.1%
BM	30-60	9,062	22.7%
BH	60-80	4,533	11.4%
BVH	80-90	81	0.2%
UL	90-100	0	0.0%
UH	100-180	0	0.0%
Total		39,880	100.0%
BUG Rating		B5-U0-G4	

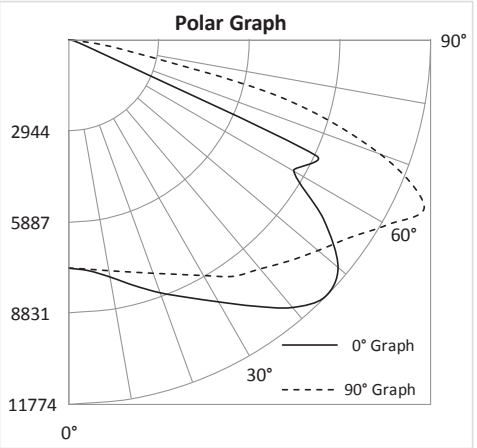

MPAL-39L-4K-T5-UNC

Luminaire Data

Description	Multi Purpose Area Light 39L, 4K
Total Lumens	40,155
Input Wattage	311
Efficacy (lm/W)	129
Max. Cd.	11602.39 (180H, 45V)
IES Classification	Type VS
Longitudinal Classification	Very Short

Luminaire Classification Systems (LCS)
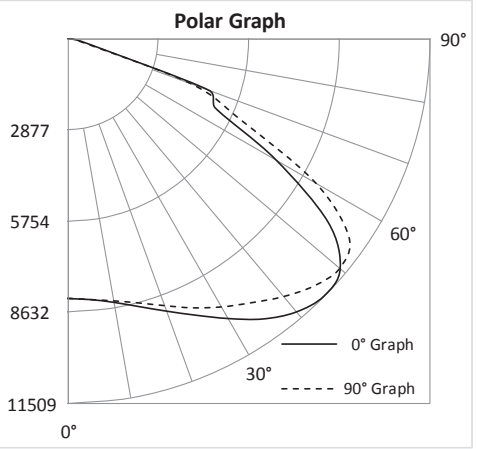
LCS Zone		Lumens	%Lum
FL	0-30	3,806	9.5%
FM	30-60	11,968	29.8%
FH	60-80	4,145	10.3%
FVH	80-90	127	0.3%
BL	0-30	3,830	9.5%
BM	30-60	12,006	29.9%
BH	60-80	4,110	10.2%
BVH	80-90	162	0.4%
UL	90-100	0	0.0%
UH	100-180	0	0.0%
Total		40,155	100.0%
BUG Rating		B5-U0-G2