LXAFRB20Q & LXAFSB20Q
Aeroform Round & Square Bollards

LEDALUX®

CATALOG NUMBER:

NOTES:

FIXTURE TYPE:

PROJECT:

L70 25°C **187,000 Hours**

BUY AMERICAN ACT COMPLIANT

LXAFRB20Q

LXAFSB20Q

Shown with GFCI

FEATURES

Housing:
Extruded Aluminum Housing with Flush Mounting Base, Sand Cast Twin Arm Head, Sealed Driver Compartment.

Listing & Ratings:
CSA: Listed for Wet Locations, ANSI/UL 1598, 8750IP66 Sealed LED Compartment.

Finish:
Textured Architectural Bronze or Black Powdercoat Finish Over a Chromate ConversionCoating. Custom Colors Available Upon Request.

Lens:
SoftLED LumaLens Opal UV-Stabilized Polycarbonate Vandal-Resistant Inner Lens to Seal LED Array.

Mounting Options:
Mounting Kit with 8" Anchor Bolts, included

EasyLED LED:
Aluminum Boards

Wattage:
Array: 16.5w, System: 19w; (70w HID Equivalent)

Driver:
Electronic Driver, 120-277V, 50/60Hz or 347V, 50/60Hz; Less Than 20% THD and PF>0.90. Standard Internal Surge Protection 2kV. 0-10V Dimming Standard for a Dimming Range of 100% to 10%; Dimming Source Current is 150 Microamps.

Controls:
Fixtures Ordered with Factory-Installed Motion Sensor Controls are Internally Wired for Switching and/or 1-10V Dimming Within the Housing. Remote Direct Wired Interface of 1-10V Dimming is Not Implied and May Not Be Available, Please Consult Factory. Fixtures are Tested with LEPG Controls and May Not Function Properly With Controls Supplied By Others. Fixtures are NOT Designed for Use with Line Voltage Dimmers.

Warranty:
5-Year Warranty for -40°C to +50°C Environment.
See Page 2 for Projected Lumen Maintenance Table.

DIMENSIONS

Dimensions	
Width (B)	11˝ (280mm)
Diameter (D)	4¾˝ (120mm)
Height (A)	42˝ (1,067mm)

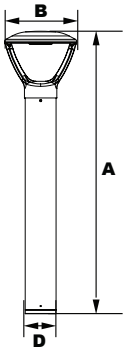

PRODUCT DESCRIPTION

The LXAFRB20Q & LXAFSB20Q EasyLED Aeroform Bollards with UV-Stabilized Polycarbonate lenses and sealed optical compartments are designed to replace HID lighting systems up to 70w MH or HPS. These fixtures are ideal for retail centers, industrial parks, schools and universities, public transit and airports, office buildings and medical facilities.

ORDERING INFORMATION

EXAMPLE: LXAFRB20QF1X17U5KLBGF1

Model	Optics	Wattage	Driver	CCT	Lens	Color	Height	Options
LXAFRB20Q = EasyLED Aeroform Round Bollard **LXAFSB20Q =** EasyLED Aeroform Square Bollard	F= Wide Beam Spread	1X17=17w	U=120-277V C=347V	3K=3000K 4K=4000K 5K=5000K	L=SoftLED LumaLens Opal UV-Stabilized Polycarbonate Array Lens	B=Black Z=Bronze C=Custom (Consult Factory)	(Leave Blank)= 42˝ Standard Height 36=36˝ Height 30=30˝ Height	GF1 = GFCI Outlet, 15A, 120V S3 = Internal Microwave Sensor (120-277V Only)

ACCESSORIES & REPLACEMENT PARTS

BREBASE*

P17122

P17121

BOADP1

*Shown Mounted

Mounting Accessories (Order Separately, Field Installed)	
BREBASE*	Bollard Retrofit Base Kit Adapts New Bollards to Most Existing Bolt Patterns. Fits all LEPG Bollards. Die Cast with Powdercoat Finish, Hardware Included. 11½″ Dia. x 1½″ H
*Specify Color: Z=Bronze, B=Black, C=Custom (Consult Factory)	

Accessories (Order Separately, Field Installed)	
P17122	Remote Programming Tool for P17121

Replacement Parts (Order Separately, Field Installed)	
P17121	Internal Microwave Sensor (120-277V Only)
BOADP1	Adapter Plate with Gaskets for Outlet Boxes. Fits LEPG Round Bollards. Die Cast with Bronze Powdercoat Finish.

PHOTOMETRIC DATA

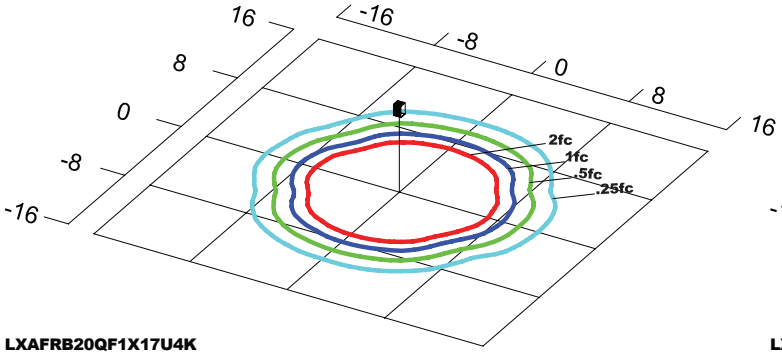

LXAFRB20QF1X17U4K
Type V
Grid in feet, Mounting Height = 3.5 ft.

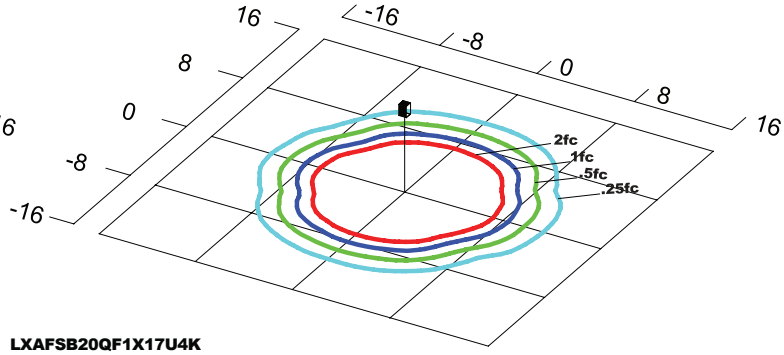

LXAFSB20QF1X17U4K
Type V
Grid in feet, Mounting Height = 3.5 ft.

PHOTOMETRIC PERFORMANCE

				4000 CCT 70 CRI				
LED Board Watts	**Drive Current (mA)**	**Input Watts**	**Optics**	**Lumens**	**LPW**	**B**	**U**	**G**
EasyLED 17w	125	20	Type V SoftLED	2,081	106	1	1	0

PROJECTED LUMEN MAINTENANCE

Data shown for 5000 CCT			Compare to MH			
TM-21-11	**Input Watts**	**Initial**	**25,000 Hrs**	**50,000 Hrs**	**100,000 Hrs**	**Calculated L70@ 25°C**
LXAFB20 L70 Lumen Maintenance @ 25°C / 77°F	20	1.00	0.96	0.92	0.84	187,000
TM-21-11	**Input Watts**	**Initial**	**25,000 Hrs**	**50,000 Hrs**	**100,000 Hrs**	**Calculated L70@ 50°C**
LXAFB20 L70 Lumen Maintenance @ 50°C / 122°F	20	1.00	0.93	0.87	0.73	113,000
TM-21-11	**Input Watts**	**Initial**	**25,000 Hrs**	**50,000 Hrs**	**100,000 Hrs**	**Calculated L80@ 40°C**
LXAFB20 L80 Lumen Maintenance @ 40°C / 104°F	20	1.00	0.97	0.93	0.86	144,000

NOTES:
1. Projected per IESNA TM-21-11. Data references the extrapolated performance projections for the 125mA base model in a 25°C ambient, based on 10,000 hours of LED testing per IESNA LM-80-08.
2. Compare to MH box indicates suggested Light Loss Factor (LLF) to be used when comparing to Metal Halide (MH) systems.